SELICA
INTERNATIONAL CO.,LTD.

No. 48-26, Xilin Ln., Xitun Dist., Taichung City 407, Taiwan
TEL: +886-4-2463 0182 E-mail: info@selica.com.tw
FAX: +886-4-2463 8910 http://www.selica.com.tw

Agents:

SELICA

Note: To reserch and improve, our company keep the right of changing designs and specifications without further notice.

2013/05 886-4-2472229/ 500

SELICA
INTERNATIONAL CO.,LTD.

VERTICAL MACHINING CENTER

http://www.selica.com.tw

CE

Linear Guideway Series

SHV-550A
X axis 550 mm
Y axis 400 mm
Z axis 460 mm

SHV-550
X axis 550 mm
Y axis 400 mm
Z axis 460 mm

SHV-1300 SHV-1500 SHV-1600
X axis 1300 mm
Y axis 750 mm
Z axis 700 mm

X axis 1500 mm
Y axis 750 mm
Z axis 700 mm

X axis 1600 mm
Y axis 750 mm
Z axis 700 mm

SHV-710
X axis 710 mm
Y axis 460 mm
Z axis 550 mm

SHV-850
X axis 850 mm
Y axis 550 mm
Z axis 580 mm

SHV-1020
X axis 1020 mm
Y axis 550 mm
Z axis 580 mm

SHV-1800
X axis1800 mm
Y axis 900 mm
Z axis 750 mm (1000 opt.)

SHV-2000
X axis 2000 mm
Y axis 900 mm
Z axis 750 mm (1000 opt.)

Box Way Series

SMV-1100
X axis 1100 mm
Y axis 600 mm
Z axis 600 mm

SMV-1300
X axis 1300 mm
Y axis 650 mm
Z axis 600 mm

SMV-1200
X axis 1200 mm
Y axis 720 mm
Z axis 610 mm

SMV-1400
X axis 1400 mm
Y axis 720 mm
Z axis 610 mm

SHV-550A
X axis 550 mm
Y axis 400 mm
Z axis 460 mm

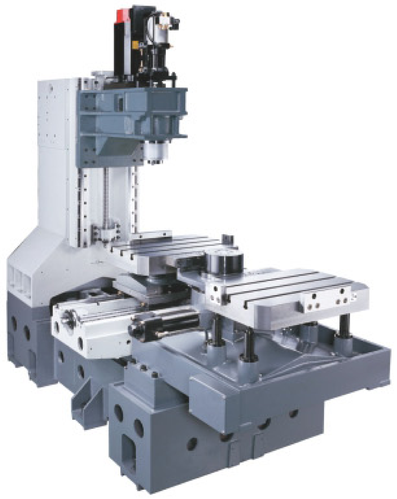

Specifications

MODEL	UNIT	SHV-550A
3- Axes travel		Linear guideways
X axis travel	mm	550
Y axis travel	mm	400
Z axis travel	mm	460
Distance from spindle nose to table surface	mm	120-580
TABLE		**Auto Pallet Changer**
Table area	mm	600 x 400
Max. load table	kgs	200 x 2
T-slot	mm	3 x 14 x 100
Pallet changing time	sec.	7
Pallet exchange method		180° changing (rotary)
SPINDLE		
Spindle taper	type	BT-40
Spindle speed	rpm	8000
Spindle drive	type	Belt
Spindle motor	kw	5.5 / 7.5
Spindle cooling	type	oil cooler

FEED RATE		
Rapid traverse (X, Y, Z)	m/min	48 / 48 / 36
Cutting feed rate	mm/min	1-15000
X, Y, Z axis servo motor	kw	1.2 / 1.2 / 1.8
ATC		
Magazine type	type	Arm
Tool magazine capacity	pcs	24
Max. tool diameter	mm	76 / 150
Max. tool length	mm	250
Max. tool weight	kgs	7
Tool selection	type	Random
OTHER		
Power consumption	KVA	20
Machine Dia (L x W x H)	mm	2000 x 2960 x 2360
Machine weight	kgs	3750

Design and specifications are subject to change without prior notice.

SHV-550

X axis 550 mm
Y axis 400 mm
Z axis 460 mm

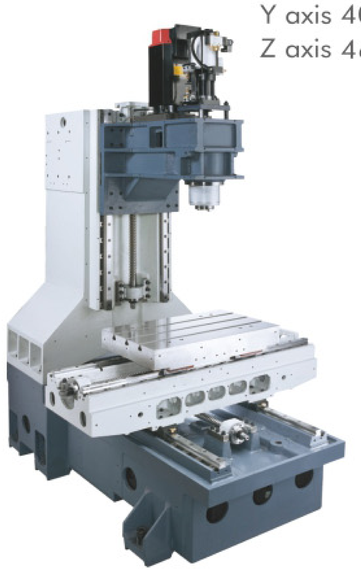

SHV-550

SHV-710

X axis 710 mm
Y axis 460 mm
Z axis 560 mm

SHV-710

Specifications

MODEL	UNIT	SHV-550		SHV-710	
3- Axes travel		Linear guideways			
X axis travel	mm	550		710	
Y axis travel	mm	400		460	
Z axis travel	mm	460		560	
Distance from spindle nose to table surface	mm	120-580		120-680	
TABLE					
Table area	mm	650 x 410		760 x 420	
Max. load table	kgs	250		450	
T-slot	mm	3 x 14 x 100		5 x 14 x 63	
SPINDLE					Standard Speed 8000 RPM
Spindle taper	type	BT-40	BT-40	BT-40	BT-40
Spindle speed	rpm	8000 / 10000	10000 / 12000 / 15000	8000 / 10000	10000 / 12000 / 15000
Spindle drive	type	Belt type	Direct Drive	Belt type	Direct Drive
Spindle motor	kw	5.5 / 7.5	5.5 / 7.5	5.5 / 7.5	5.5 / 7.5
Spindle cooling	type	oil cooler (std.)		oil cooler (std.)	
FEED RATE					
Rapid traverse (X, Y, Z)	m/min	48 / 48 / 36		30 / 30 / 24	
Cutting feed rate	mm/min	1-15000		1-15000	
X, Y, Z axis servo motor (FANUC)	kw	1.2 / 1.2 / 1.8		1.2 / 1.2 / 1.8	
X, Y, Z axis servo motor (MITSUBISHI)	kw	1.5 / 1.5 / 2		1.5 / 1.5 / 2	
ATC					
Magazine type	type	Carousel	Arm	Carousel	Arm
Tool magazine capacity	pcs	16	24	16	24
Max. tool diameter	mm	100 / 150	76 / 150	100 / 150	76 / 150
Max. tool length	mm	250	200	250	250
Max. tool weight	kgs	7	7	7	7
Tool selection	type	Fixed-type	Random	Fixed-type	Random
OTHER					
Power consumption	KVA	20		20	
Machine Dia (L x W x H)	mm	1900 x 2450 x 2600		2330 x 2340 x 2740	
Machine weight	kgs	3400		4200	

Design and specifications are subject to change without prior notice.

Linear Guideway Series

SHV-850

X axis 850 mm
Y axis 550 mm
Z axis 580 mm

SHV-850/1020

Frame machine

Linear guideways type

Ball type (std.)

Roller type (opt.)

SHV-1020

X axis 1020 mm
Y axis 550 mm
Z axis 580 mm

Specifications

MODEL	UNIT	SHV-850		SHV-1020	
3- Axes travel		Linear guideways			
X axis travel	mm	850		1020	
Y axis travel	mm	550		550	
Z axis travel	mm	580		580	
Distance from spindle nose to table surface	mm	120-700		120-700	
TABLE					
Table area	mm	1020 x 550		1190 x 550	
Max. load table	kgs	600		800	
T-slot	mm	4 x 18 x 125		4 x 18 x 125	
SPINDLE		Standard Speed 8000 RPM			
Spindle taper	type	BT-40	BT-40	BT-40	BT-40
Spindle speed	rpm	8000 / 10000	10000 / 12000 / 15000	8000 / 10000	10000 / 12000 / 15000
Spindle drive	type	Belt type	Direct Drive	Belt type	Direct Drive
Spindle motor	kw	7.5 / 11	7.5 / 11	7.5 / 11	7.5 / 11
Spindle cooling	type	oil cooler (std.)		oil cooler (std.)	
FEED RATE					
Rapid traverse (X, Y)	m/min	30		30	
Rapid traverse (Z)	m/min	24		24	
Cutting feed rate	mm/min	1-15000		1-15000	
X, Y, Z axis servo motor (FANUC)	kw	1.8 / 1.8 / 2.5		1.8 / 1.8 / 2.5	
X, Y, Z axis servo motor (MITSUBISHI)	kw	3.5		3.5	
ATC					
Magazine type	type	Carousel	Arm	Carousel	Arm
Tool magazine capacity	pcs	16	24	16	24
Max. tool diameter	mm	100 / 180	76 / 150	100 / 180	76 / 150
Max. tool length	mm	250	250	250	250
Max. tool weight	kgs	7	7	7	7
Tool selection	type	Fixed-type	Random	Fixed-type	Random
OTHER					
Power consumption	KVA	20		20	
Machine Dia (L x W x H)	mm	3100 x 2750 x 2950		3310 x 2750 x 2950	
Machine weight	kgs	6200		6800	

Design and specifications are subject to change without prior notice.

SHV-1300

X axis 1300 mm
Y axis 750 mm
Z axis 700 mm

SHV-1500

X axis 1500 mm
Y axis 750 mm
Z axis 700 mm

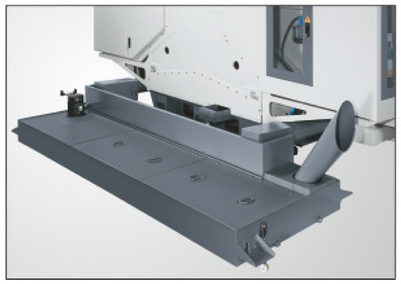

SHV-1300 / SHV-1500
(Rear Chip Conveyor)

SHV-1600

X axis 1600 mm
Y axis 750 mm
Z axis 700 mm

SHV-1600

Specifications

MODEL	UNIT	SHV-1300		SHV-1500		SHV-1600	
3- Axes travel		Linear guideways					
X axis travel	mm	1300		1500		1600	
Y axis travel	mm	750		750		750	
Z axis travel	mm	700		700		700	
Distance from spindle nose to table surface	mm	150-850		150-850		120-820	
TABLE							
Table area	mm	1300 x 750		1500 x 750		1650 x 750	
Max. load table	kgs	1000		1000		1200	
T-slot	mm	5 x 18 x 150		5 x 18 x 150		5 x 18 x 125	
SPINDLE		Standard Speed 8000 RPM					
Spindle taper	type	BT-40		BT-40		BT-40	
Spindle speed (Belt type)	rpm	8000 / 10000		8000 / 10000		8000 / 10000	
Spindle speed (Direct Drive)	rpm	10000 / 12000 / 15000		10000 / 12000 / 15000		10000 / 12000 / 15000	
Spindle motor	kw	7.5 / 11		7.5 / 11		11 / 15	
Spindle cooling	type	Oil cooler (std.)		Oil cooler (std.)		Oil cooler (std.)	
FEED RATE							
Rapid traverse (X, Y)	m/min	30		30		30	
Rapid traverse (Z)	m/min	24		24		24	
Cutting feed rate	mm/min	1-15000		1-15000		1-15000	
X, Y, Z axis servo motor (FANUC)	kw	4 / 4 / 7		4 / 4 / 7		4 / 4 / 7	
X, Y, Z axis servo motor (MITSUBISHI)	kw	4.5 / 4.5 / 7		4.5 / 4.5 / 7		4.5 / 4.5 / 7	
ATC							
Magazine type	type	Carousel	Arm	Carousel	Arm	Carousel	Arm
Tool magazine capacity	pcs	16	24	16	24	16	24
Max. tool diameter	mm	100 / 180	76 / 150	100 / 180	76 / 150	100 / 180	76 / 150
Max. tool length	mm	300	300	300	300	300	300
Max. tool weight	kgs	7	7	7	7	7	7
Tool selection	type	Fixed-type	Random	Fixed-type	Random	Fixed-type	Random
OTHER							
Power consumption	KVA	30 (40 opt.)		30 (40 opt.)		40	
Machine Dia (L x W x H)	mm	4300 x 3500 x 3000		4300 x 3500 x 3000		4400 x 3050 x 3200	
Machine weight	kgs	9000		10000		11000	

Design and specifications are subject to change without prior notice.

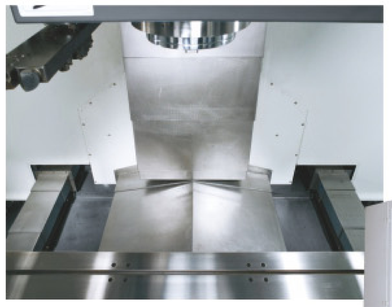

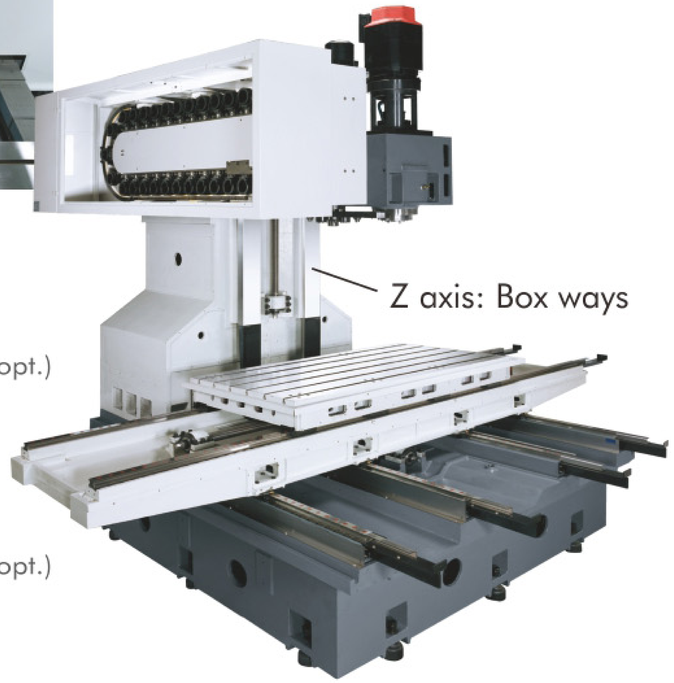

SHV-1800

X axis1800 mm
Y axis 900 mm
Z axis 750 mm / 1000 mm (opt.)

SHV-2000

X axis 2000 mm
Y axis 900 mm
Z axis 750 mm / 1000 mm (opt.)

Specifications

MODEL	UNIT	SHV-1800	SHV-2000
TRAVEL		Linear guideways (X,Y) + Box ways (Z)	
X axis travel	mm	1800	2000
Y axis travel	mm	900	
Z axis travel	mm	750 / 1000 (opt.)	
Spindle nose to table surface	mm	150-900 / 150-1150 (opt.)	
Spindle center to column surface	mm	950	
TABLE			
Table area	mm	1850 x 900	2050 x 900
Max. load of table	kgs	2500	3000
T-slot	mm	6 x 18 x 145	
SPINDLE			
Spindle speed	rpm	6000 (Belt)	
Spindle taper		BT-50	
AUTOMATIC TOOL CHANGER			
Magazine type		Arm Type	
Tool magazine capacity	pcs	24T	32T(opt.)
Max. tool diameter	mm	110-220	125-220
Max. tool length	mm	300	300
Max. tool weight	kgs	15	15
MOTOR			
Spindle motor	Kw	11/15	15/18.5
X/Y/Z axis motor	Kw	7 / 7 / 7	
FEED RATE			
Rapid traverse (X, Y, Z)	M/min	24 / 24 / 15	
Cutting feed rate	mm/min	1-7000	
BALL SCREW			
Diameter of X,Y,Z axis	mm	50	
Pitch of X, Y, Z axis	mm	10	
GUIDEWAYS			
Width of linear guideways (X,Y)	mm	45 (8 blocks for each axis)	
Width of box ways (Z)	mm	140 (55 thickness)	
OTHERS			
Machine Dia (L x W x H)	mm	5800 x 4000 x 3650	
Machine weight	kgs	17500	18500

Design and specifications are subject to change without prior notice.

Box Way Series

SMV-1100

X axis 1100 mm
Y axis 600 mm
Z axis 600 mm

SMV-1300

X axis 1300 mm
Y axis 650 mm
Z axis 600 mm

Specifications

MODEL	UNIT	SMV-1100		SMV-1300	
3- Axes travel		Box Way Series		Box Way Series	
X axis travel	mm	1100		1300	
Y axis travel	mm	600		650	
Z axis travel	mm	600		600	
Distance from spindle nose to table surface	mm	120-720		120-720	
TABLE					
Table area	mm	1250 x 650		1450 x 650	
Max. load table	kgs	880		1000	
T-slot	mm	5 x 18 x 125		5 x 18 x 125	
SPINDLE					
Spindle taper	type	BT-40	BT-50 (opt.)	BT-40	BT-50 (opt.)
Spindle speed	rpm	8000	6000 (opt.)	8000	6000 (opt.)
Spindle drive	type	Belt type		Belt type	
Spindle motor	kw	7.5 / 11		11 / 15	
Spindle cooling	type	Oil cooler (std.)		Oil cooler (std.)	
FEED RATE					
Rapid traverse (X, Y)	m/min	18		18	
Rapid traverse (Z)	m/min	15		15	
Cutting feed rate	mm/min	1-10000		1-10000	
X, Y, Z axis servo motor (FANUC)	kw	2.5		3	
X, Y, Z axis servo motor (MITSUBISHI)	kw	3.5		3.5	
ATC					
Magazine type	type	Carousel	Arm	Carousel	Arm
Tool magazine capacity	pcs	16	24	16	24
Max. tool diameter	mm	100 / 180	76 / 150	100 / 180	76 / 150
Max. tool length	mm	300	300	300	300
Max. tool weight	kgs	7	7	7	7
Tool selection	type	Fixed-type	Random	Fixed-type	Random
OTHER					
Power consumption	KVA	20		20	
Machine Dia (L x W x H)	mm	3245 x 2560 x 2620		3650 x 2560 x 2620	
Machine weight	kgs	7500		8000	

Design and specifications are subject to change without prior notice.

Box Way Series

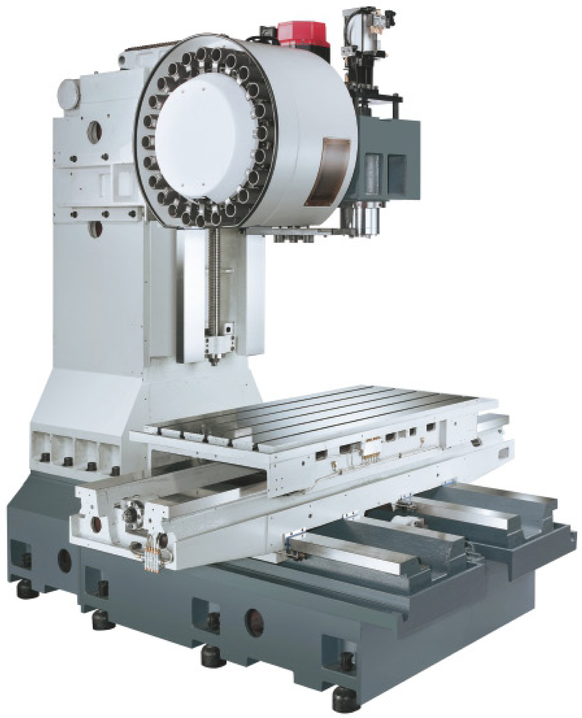

SMV-1200

X axis 1200 mm
Y axis 720 mm
Z axis 610 mm

SMV-1400

X axis 1400 mm
Y axis 720 mm
Z axis 610 mm

Chain type chip conveyor (optional)

Specifications

MODEL	UNIT	SMV-1200		SMV-1400	
TRAVEL		Box Way		Box Way	
X axis travel	mm	1200		1400	
Y axis travel	mm	720		720	
Z axis travel (#40 taper)	mm	610		610	
Z axis travel (#50 taper – opt.)	mm	680		680	
Spindle nose to table surface (#40)	mm	150-760		150-760	
Spindle nose to table surface (#50 – opt.)	mm	170-850		170-850	
Distance from spindle center to column	mm	745		745	
TABLE					
Table area	mm	1350 x 700		1550 x 700	
Max. load of table	kgs	1600		2000	
T-slot	mm	5 x 18 x 130		5 x 18 x 130	
SPINDLE					
Spindle taper		BT40 (#50 - opt.)		BT40 (#50 - opt.)	
Spindle speed (#40, Belt head)	rpm	8000 (10000/12000 - opt.)		8000 (10000/12000 - opt.)	
(#50, Belt head)	rpm	6000 (opt.)		6000 (opt.)	
(#50, Gear box)	rpm	6000 (opt.)		6000 (opt.)	
Spindle motor	kw	11 / 15		11 / 15	
Spindle cooling		Oil cooler (std.)		Oil cooler (std.)	
FEED RATE					
Rapid traverse (X, Y)	m/min	18		18	
Rapid traverse (Z)	m/min	15		15	
Cutting feed rate	m/mm	10000		10000	
SERVO MOTOR					
X Axis motor	kw	3		3	
Y Axis motor	kw	3		3	
Z Axis motor	kw	3		3	
AUTO TOOL CHANGER					
Magazine type		Carousel	Arm	Carousel	Arm
Tool magazine capacity	pcs	16	24	16	24
Max. tool diameter	mm	100	76 / 150	100	76 / 150
Max. tool length	mm	250	300	300	300
Max. tool weight	kgs	7	7	7	7
OTHER					
Power consumption	KVA	30		30	
Machine Dia (L x W x H)	mm	3790 x 3800 x 2845		4190 x 3800 x 3010	
Machine weight	kgs	8500		9500	

Design and specifications are subject to change without prior notice.

CNC Vertical Double-Column High-Speed Machine

SF-6

X axis 600 mm
Y axis 600 mm
Z axis 350 mm
Spindle speed 30,000 rpm

SF-16

X axis 1600 mm
Y axis 750 mm
Z axis 500 mm
Spindle speed 20,000 rpm

SF-11

X axis 1100 mm
Y axis 750 mm
Z axis 500 mm
Spindle speed 20,000 rpm

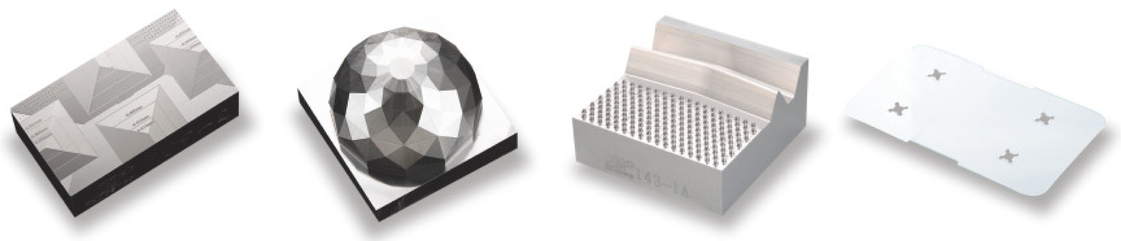

SF series

Model			SF-6	SF-11	SF-16
Table	Working surface	mm	600x600	1,100x750	1,600x750
	T-Slots (WxNo.)	mm	14x4 (P=100)	22x6 (P=100)	22x6 (P=100)
	Max. table load	kg	500	1,000	1,500
	Column span	mm	647	850	850
Travel	X-axis (Spindle left / right)	mm	600	1,100	1,600
	Y-axis (Table in / out)	mm	600	750	750
	Z-axis (Spindle vertical)	mm	350	500	500
	Spindle nose to table surface	mm	150 ~ 500	150 ~ 650	150 ~ 650
Spindle	Spindle nose		ISO30/HSK-40E/SK-30	BT40/HSK-63A/SK-40	BT40/HSK-63A/SK-40
	Spindle Speed	rpm	30,000	15,000 / 20,000	15,000 / 20,000
	Spindle motor	kw	(Built-in) 6.4	(Built-in) 18	(Built-in) 18
Feed rate	Cutting feed rate	mm/min	1 ~ 12,000	1 ~ 12,000	1 ~ 12,000
	X/Y/Z Axis rapid traverse	m/min	30 x 30 x 30	30 x 30 x 30	30 x 30 x 30
Automatic tool changer	Tool shank		ISO30/HSK-40E	BT40/HSK-63A	BT40/HSK-63A
	Tool storage capacity	Tools	16	20	20
	Max. tool (Diam.xLength)	mm	ø40 x 150	ø60 x 240	ø60 x 240
	Max. tool weight	kg	1.5	8	8
	Tool selection		Arbitrarily Direction	Arbitrarily Direction	Arbitrarily Direction
Machine size	Machine dimension	mm	2,270x2,020x2,460	3,250x3,600x3,200	3,250x4,500x3,200
	Transformer	KVA	20	45	45
	Machine weight	kg	4,500	10,500	13,000
	Gross weight	kg	5,330	12,200	14,700
	Packing advice		1 x 40'HQ (4 sets)	20' flat	20' flat

5-Axis series Machine Specifications

Model			STC-6	STC-11
Travel	X-axis	mm	600	1,100
	Y-axis	mm	600	750
	Z-axis	mm	240	300
Table	Table diameter	mm	ø170	ø450
	T-Slots	mm	12H7	14H7
	Max. table load	kg	35 ~ 50	150 ~ 250
B-axis C-axis	B-axis tilting range	°	-110° ~ +110°	-110° ~ +110°
	C-axis rotating	°	360°	360°
	B,C-axis max. table rotation speed	rpm	5.5 / 5.5	5.5 / 11.1
	B,C-axis indexing accuracy	sec	60" / 20"	60" / 15"
	B,C-axis repeatability	sec	±2" / ±2"	±2" / ±2"
Spindle	Spindle nose		ISO30/HSK-40E/SK-30	BT40/HSK-63A/SK-40
	Spindle Speed	rpm	30,000	15,000 / 20,000
	Spindle motor	kw	6.4	18
Feed rate	Cutting feed rate	mm/min	1 ~ 12,000	1 ~ 12,000
	X/Y/Z Axis rapid traverse	m/min	30 x 30 x 30	30 x 30 x 30
Automatic tool changer	Tool storage capacity	Tools	16	20
	Max. tool (Diam.xLength)	mm	ø40 x 150	ø60 x 240
	Max. tool weight	kg	1·5	8
Machine size	Machine dimension	mm	2,400x2,020x2,490	3,250x3,600x3,200
	Transformer	KVA	35	55
	Machine weight	kg	5,000	11,500
	Gross weight	kg	6,000	13,000
	Packing advice		1 x 40'HQ (4 sets)	20' flat

Specifications and design characteristics are subject to change without prior notice.