SELICA INTERNATIONAL CO.,LTD.

PRECISION CNC LATHE
CNC MULTI-TASKING TURNING CENTER

http://www.selica.com.tw

CE

CNC GANG/ TURRET LATHE

SD-25/32

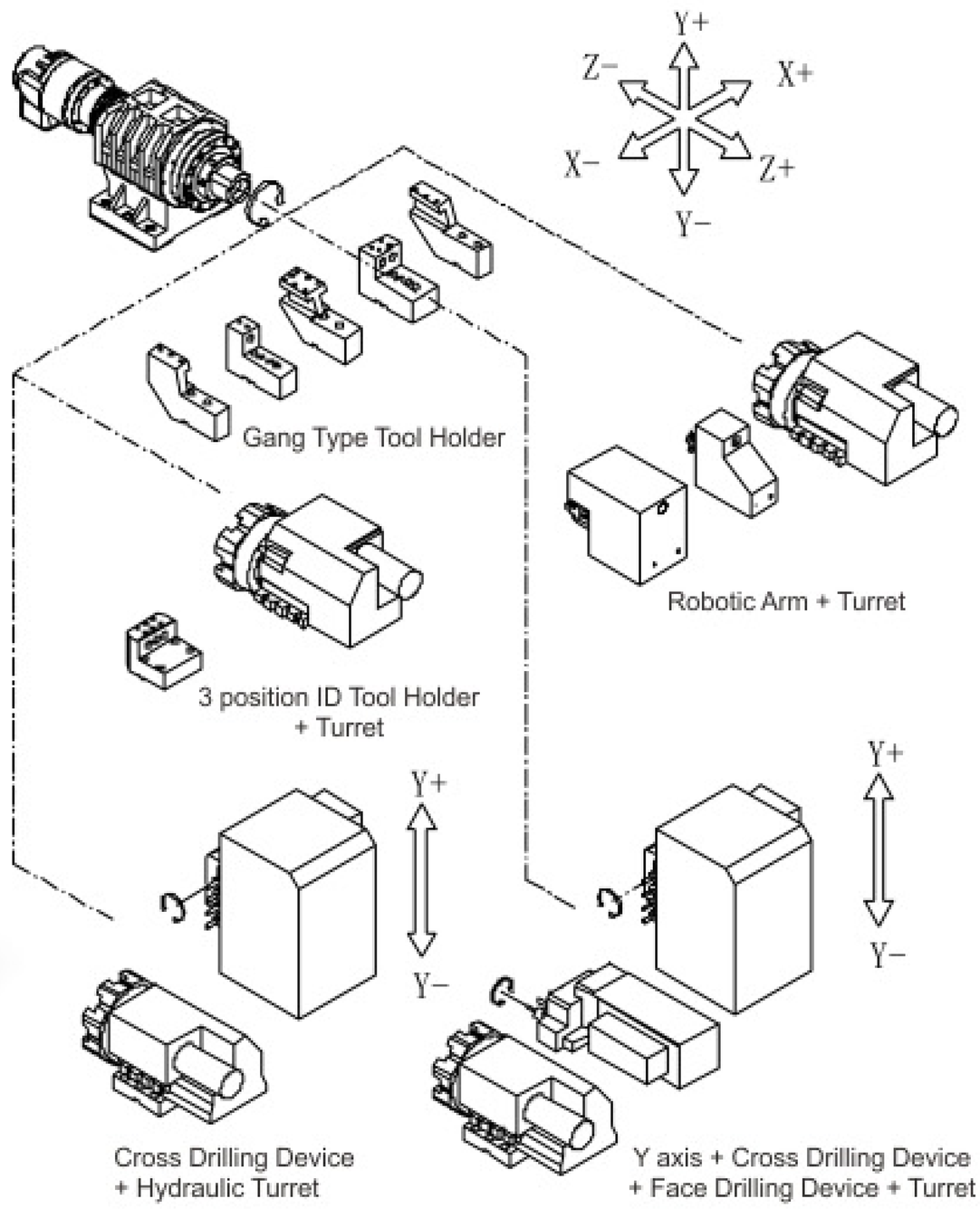

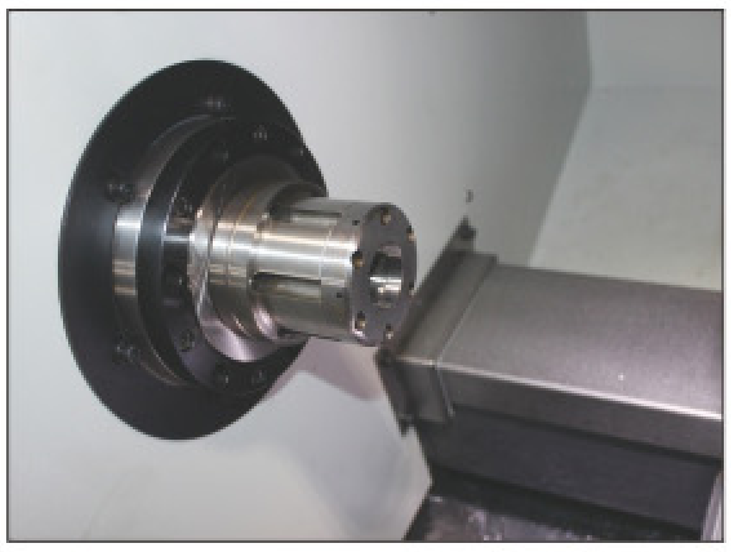

Collet Chuck

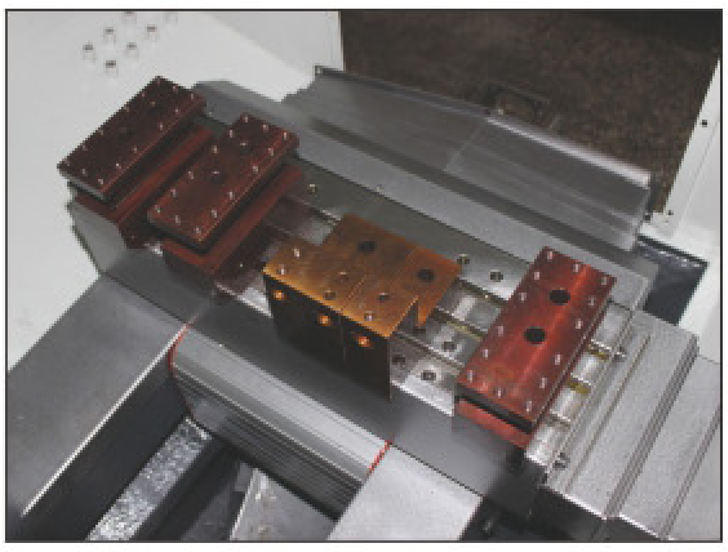

Gang Type Tool Holder

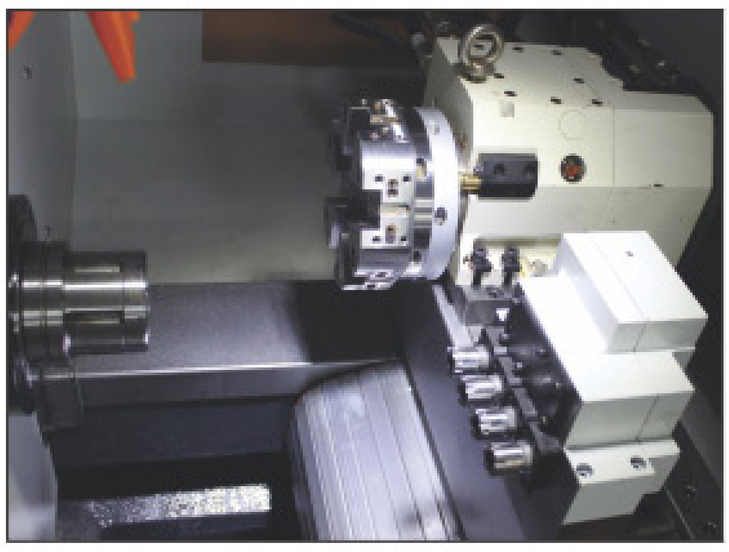

Hydraulic Turret
+ Face Drilling Device

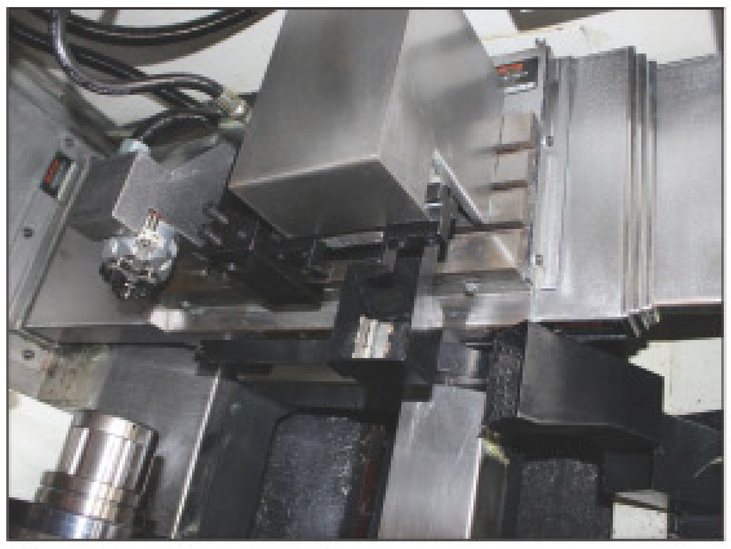

Robotic Arm

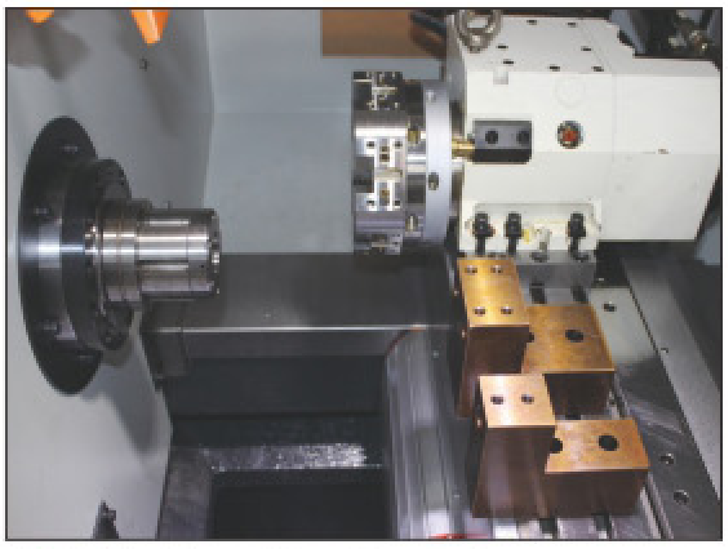

Hydraulic Turret
+ 3 position ID Tool Holder

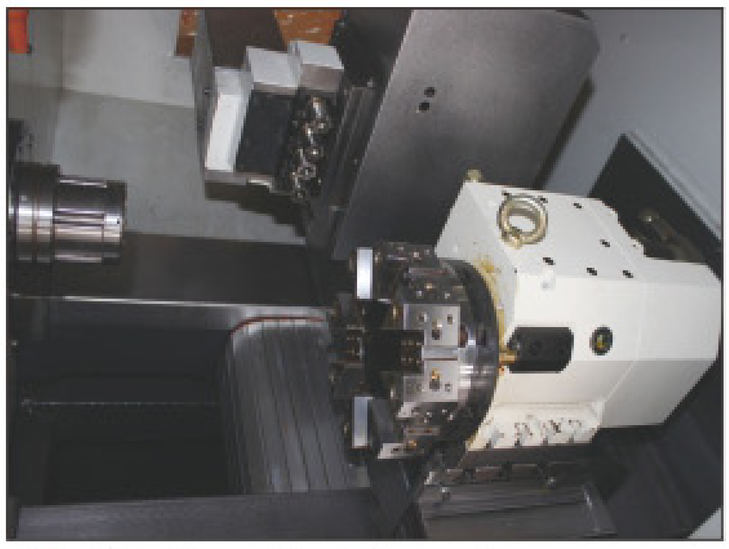

Hydraulic Turret
+ Cross Drilling Device

Model	Unit	SD-25/32	SD-25Y/32Y
Max. Swing Over Bed	mm	500	500
Max. Turning Diameter	mm	Ø100	Ø100
Spindle Bore Diameter	mm	Ø25 / Ø32	Ø25 / Ø32
Max. Turning Length	mm	100	100
X/Z Axis Travel	mm	200/200	230/200
X/Z Axis Rapid Traverse	m/min	15	15
Positioning Accuracy	mm	0.005	0.005
Transmission		Belt	Belt
Spindle Motor	kw	3.7	3.7
Spindle Speed	rpm	50-6000	50-6000
Spindle Spec.		4"	4"
Ballscrew Diameter	mm	Ø25	Ø25
X/Z Axis Motor	kw	0.75	0.75
Number Of Tool Station	pcs	8	8
Turret Indexing Time	sec	0.3	0.3
3-Position ER16 Front Drilling Motor	kw	x	0.75
4-Position ER16 Cross Drilling Motor	kw	x	0.75
Y Axis Motor	kw	x	0.75
Slideway Type		Linear guide way	Linear guide way
Turning Tool Diameter	mm	□16	□16
Boring Tool Diameter	mm	Ø20	Ø20
Coolant Motor	HP	1/4	1/4
Coolant Tank Capacity	L	80(85%)	80(85%)
Hydraulic Motor	HP	1	1
Hydraulic Tank Capacity	L	20(85%)	20(85%)
Power Requirement	kva	10	10
Machine Dimensions (LxWxH)	mm	1850x1500x1700	1850x1500x1700
Weight	kg	1700	1750

Standard Accessory

- lighting device
- Cutting coolant
- Lubrication device
- Tool & tool box
- Foot switch
- Operation manual
- NC operation manual
- NC maintenance manual
- Collet chuck
- Barfeeder interface
- Inner tool holder
- Wedge block
- Cutting tool sleeve
- C axis (For SD-25Y/32Y)
- Spindle breaking system (For SD-25Y/32Y)
- Heat exchanger

Optional Accessory

- parts conveyor
- Parts catcher
- Robotic arm
- 4" 3 jaw chuck
- Chuck air blow
- Chip conveyor
- Bar feeder
- Voltage stabilizer
- Transformer

CNC SLANT BED LATHE

SL-42/52

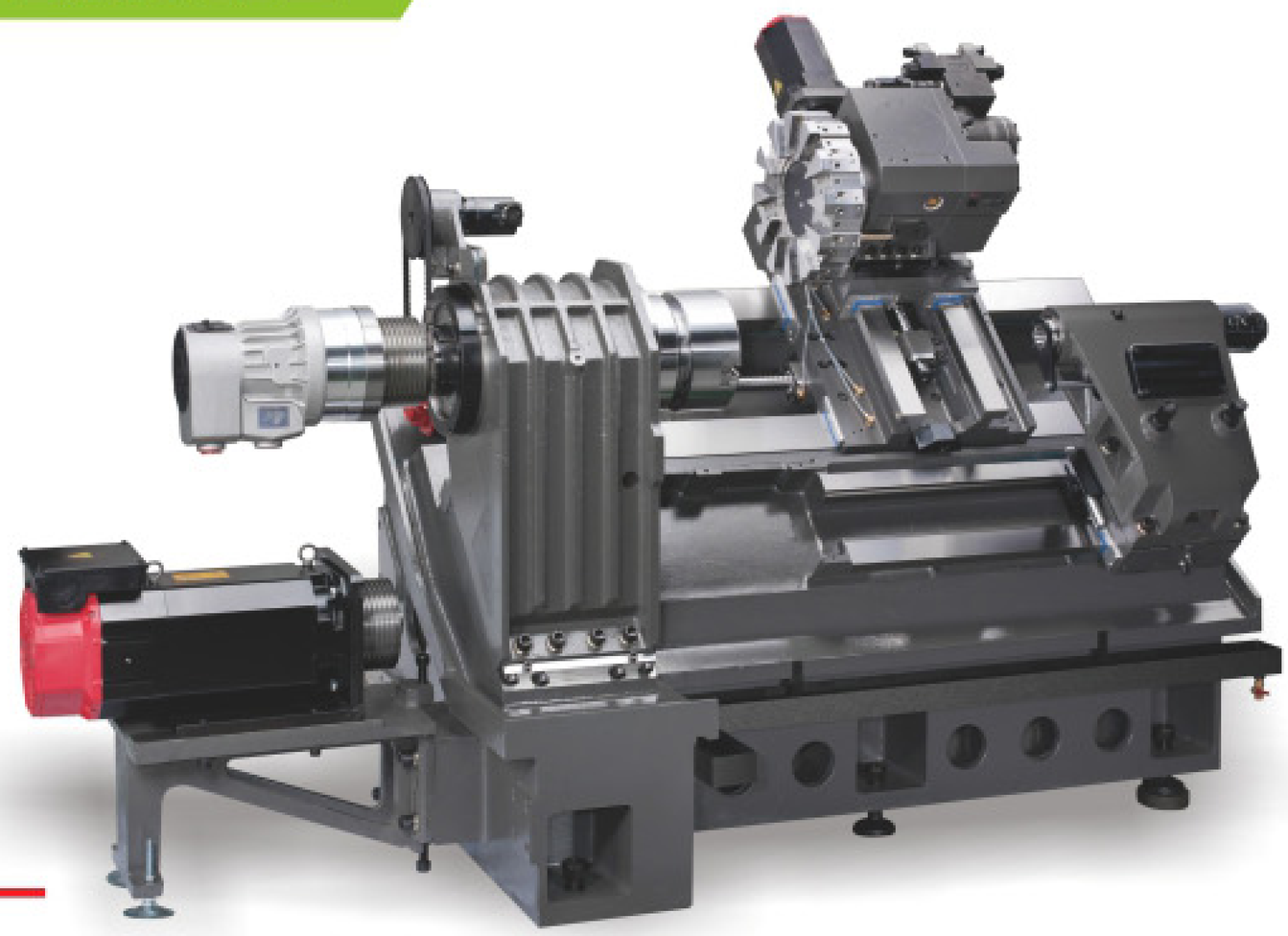

Box Way

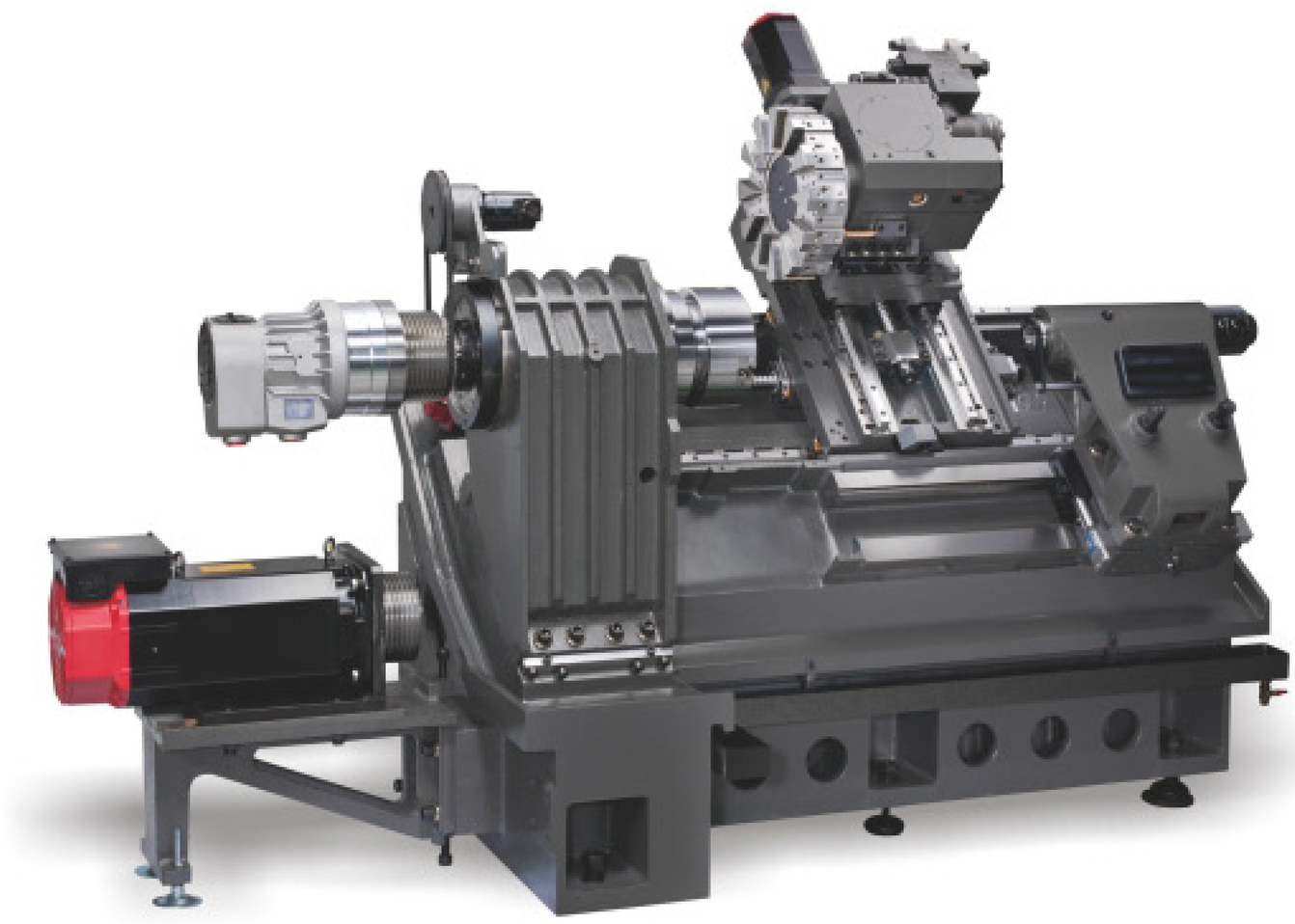

Linear Guide Way

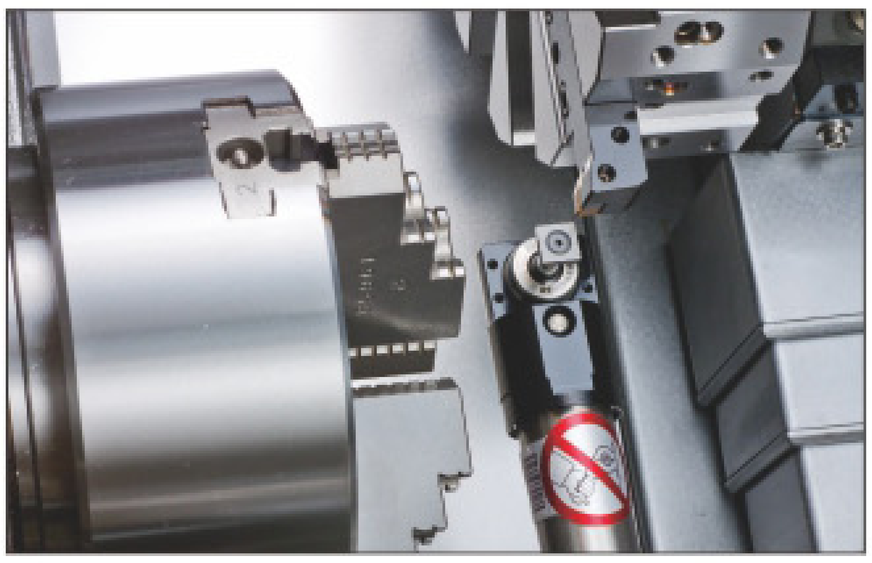

The automatic tool measuring device employs a touch sensor for measuring tool length, providing added convenience in tool setting. In addition, the device also provides tool breakage detecting function.

Once parts machining is finished, the parts catcher can be used to collect the parts. By using the parts catcher, parts collection is convenient and parts scratching can be minimized.

Model	Unit	SL-42	SL-52	SH-42	SH-52
Swing over bed	mm	470	470	470	470
Swing over saddle	mm	360	360	360	360
Max. turning diameter	mm	240	240	240	240
Max. turning length	mm	462	462	462	462
Max. distance between centers	mm	600	590	600	590
Spindle nose type	ASA	A2-5	A2-6	A2-5	A2-6
Chuck size	inch	6	8	6	8
Hole through spindle	mm	56	62	56	62
Spindle speed	rpm	6000	4500	6000	4500
Spindle horsepower(cont/30min.)	kW	7.5/11	7.5/11	7.5/11	7.5/11
Spindle accuracy	mm	0.003	0.003	0.003	0.003
Bar capacity	mm	45	52	45	52
Z-axis travel	mm	500	500	500	500
X-axis travel	mm	185	185	185	185
Z-axis rapid traverse rate	M/min	20	20	20	20
X-axis rapid traverse rate	M/min	20	20	20	20
Number of tool station	T	12	12	12	12
Tool size	mm	20x20	20x20	20x20	20x20
Boring tool size	mm	32	32	32	32
Tailstock travel	mm	500	500	500	500
Quill travel	mm	80	80	80	80
Quill diameter	mm	70	70	70	70
Quill taper	MT	4	4	4	4
Quill drive		Hydraulic	Hydraulic	Hydraulic	Hydraulic
Tailstock positioning		Manual	Manual	Manual	Manual
Machine dimensions(LxWxH)	M	2.6x1.62x1.85	2.6x1.62x1.85	2.6x1.62x1.85	2.6x1.62x1.85

Standard Accessory

- 6" or 8" hydraulic chuck
- Hard jaws (set)
  6" (SL-42 / SH-42)
  8" (SL-52 / SH-52)
- Soft jaws (set)
  6" (SL-42 / SH-42)
  8" (SL-52 / SH-52)
- Hydraulic turret
- Boring tool holder
- End facing tool holder
- Bushing (set) Ø 8, 10, 12, 16, 20, 25, each 1 pcs
- Bi-directional tool holder
- Coolant system
- Movable coolant tank
- Leveling bolts and blocks
- Automatic lubrication system
- Working lamp
- Foot switch for hyd. Chuck control
- Tool box (set)
- Operation manual
- Chip conveyor and chip cart
- Live center (MT 4 / MT 5)
- Three-color warning lamp
- Hydraulic tailstock

Optional Accessory

- Servo turret
- Grease lubrication system
- Parts catcher
- Automatic tool measuring device
- Oil skimmer
- Oil mist collector
- Transformer
- CE certification
- Pneumatic automatic door
- Foot switch for tailstock control
- Hydraulic multiple bar feeder
- Collet chuck
- Chuck air blow
- High pressure cooling system
- Programmable quill of tailstock

CNC SLANT BED LATHE

SL-60/75/90

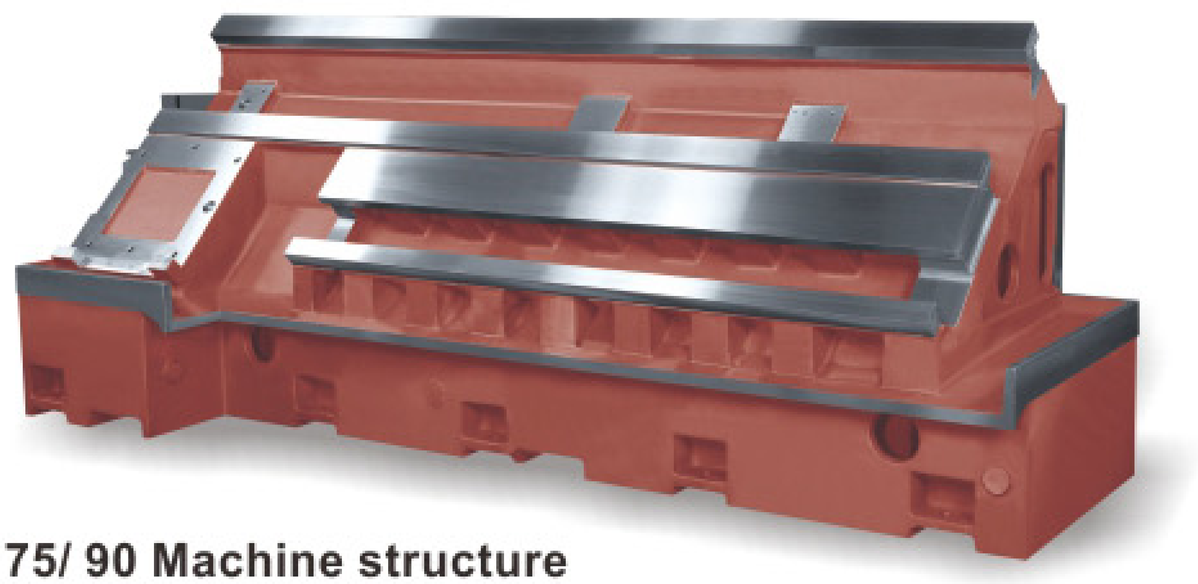

75/ 90 Machine structure
The machine base has one piece structure for extra high rigidity.

Model	Unit
Max. Swing Over Bed	mm
Max. Turning Diameter	mm
Max. Turning Length	mm
Material Collect Length	mm
Spindle Max. Bar Capacity	mm
Spindle Bore Diameter	mm
Spindle Nose	
Spindle Speed Range	rpm
Spindle Motor	kw
Number Of Tool Stations	
Max. Stroke X-axis	mm
Max. Stroke Z-axis	mm
Rapid Traverse X-axis	m/min
Rapid Traverse Z-axis	m/min
Turret Indexing Time	sec
Machine Slant Design	deg
Slideway Type	
Tailstock Taper	
Tailstock Traverse	mm
Spindle Hydraulic Chuck	inch
Turning Tool Diameter	mm
Boring Tool Diameter	mm
Driven Tool Motor Power /30min	kw
Hydraulic Motor	kw
Lubrication Motor	w
Power Requirement	kva
Coolant Tank Capacity	L
Machine Dimensions (LxWxH)	mm
Weight	kg

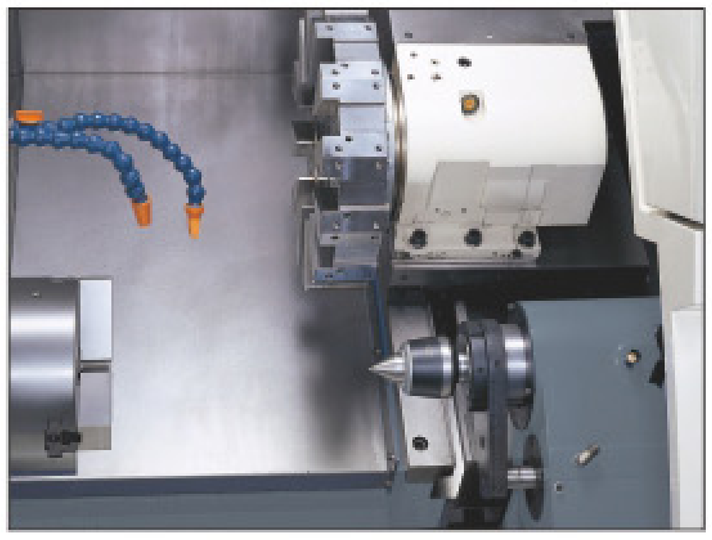

3-Jaw Chuck, Turret and Tailstock
The 12-position heavy turret features large diameter curvic coupling and high pressure of 4396 kgf. Tool change time between adjacent tools is 0.3 seconds.

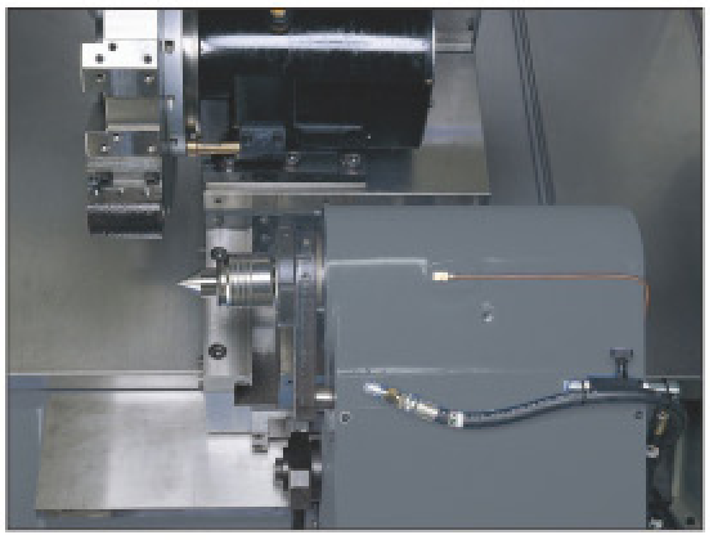

Programmable Tailstock
The widely spaced tailstock slideways and heavy duty construction assure maximum rigidity. The center sleeve can be controlled by foot switch or programs.

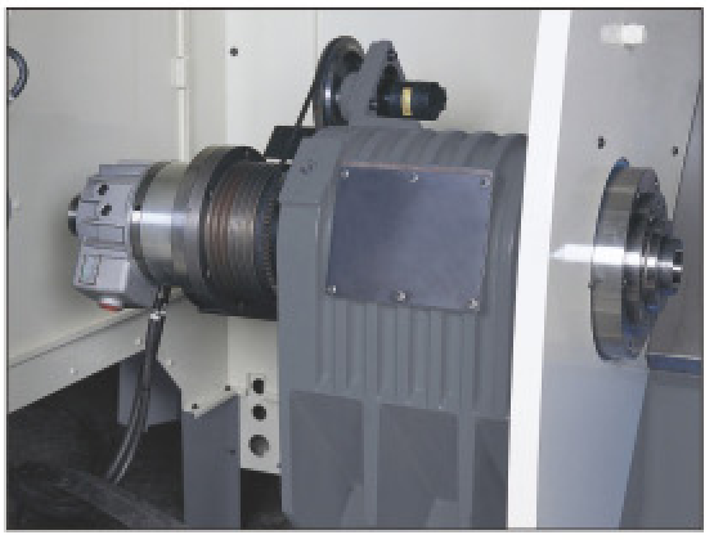

Precision Spindle
The spindle stock is manufactured from high quality meehanite cast iron. The spindle stock surface has fins to increase heat dissipation efficiency while assuring spindle accuracy.

SL-60	SL-60L	SL-75/90	SL-75L/90L	SL-75M/90M	SL-75ML/90ML
Ø510	Ø510	Ø670	Ø670	Ø670	Ø670
Ø320	Ø320	Ø520	Ø520	Ø400	Ø400
320	500	610	1100	540	1100
130	130	150	150	150	150
Ø60	Ø60	Ø73/Ø89	Ø73/Ø89	Ø73/Ø89	Ø73/Ø89
Ø75	Ø75	Ø87/Ø102	Ø87/Ø102	Ø87/Ø102	Ø87/Ø102
A2-6	A2-6	A2-8	A2-8	A2-8	A2-8
45~3500		45~3000	45~3000	45~3000	45~3000
15		18.5/22	18.5/22	18.5/22	18.5/22
12(8)		12/10	12/10	12	12
170	170	270	270	270	270
360	550	650	1150	550	1050
16	16	16	16	16	16
20	20	20	20	20	20
0.3	0.3	0.3	0.3	0.3	0.3
30°	30°	45°	45°	45°	45°
Linear Guideway	Linear Guideway	Square Guideway	Square Guideway	Square Guideway	Square Guideway
MT4	MT4	MT5	MT5	MT5	MT5
100	100	160	160	160	160
8"	8"	10" /12"	10"/ 12"	10"/ 12"	10"/ 12"
□20	□20	□32	□32	□32	□32
Ø32	Ø32	Ø50	Ø50	VDI 50	VDI 50
—	—	—	—	7.5	7.5
1.5	1.5	1.5	1.5	1.5	1.5
3.5	3.5	75	75	75	75
32	32	44	44	56/62	56/62
120 (85%)	120 (85%)	190 (85%)	190 (85%)	190 (85%)	190 (85%)
2475X1605X1910	2780X1625X1950	3209x1990x2200	3965x1990x2200	3290x1990x2200	3965x1990x2200
2800	3200	6350/6380	7510/7530	6400/6430	7560/7590

Standard Accessory

- Coolant device
- Splash guard
- 12-position hydraulic turret (For SL-60/60L/75/75L/90/90L)
- 12-position power turret (For SL-75M/75ML/90M/90ML)
- Tailstock
- Chuck Air Blow
- Tool & tool box
- Wedge block
- Leveling pads
- Foot switch
- 8" 3-jaw chuck (For SL-60/60L)
- 10"/12" 3-jaw chuck (For SL-75/90 series)
- Boring tool holder 5 pcs (For Hydraulic turret only)
- Heat exchanger
- Operation manual
- C axis (For SL-75M/75ML/90M/90ML)

Optional Accessory

- Chip conveyor and cart
- Transformer
- Parts conveyor
- Parts catcher
- Tool setter
- Programmable tailstock
- Hydraulic servo turret (For SL-60/60L/75/75L/90/90L)
- Voltage stabilizer
- CE certification

CNC SWISS TYPE LATHE

SS-20/20A/20AB

Standard Accessory

- Fixed guide bush holder
- Guide bush
- Spindle collet
- Coolant inspection
- Cut off inspection
- Lubrication device
- Parts catcher
- Leveling pad
- Cutting coolant device
- Work light
- Tool & tool box
- Chuck gripper
- Operation manual
- Non guide bush holder
- ER 16 collet chuck (double side)
  (For SS-20S/20AS/20AB)
- Stationary tool holder ($2) x 2 (For SS-20AB)
- Rotary tool holder ($2) x 2 (For SS-20AB)

Optional Accessory

- Simultaneously rotary guide bush holder
- Voltage stabilizer
- Long parts catcher
- Transformer
- Multiple bar feeder 3.2M
- Chip conveyor
- ER 16 collet set
- Parts conveyor
- CE certification

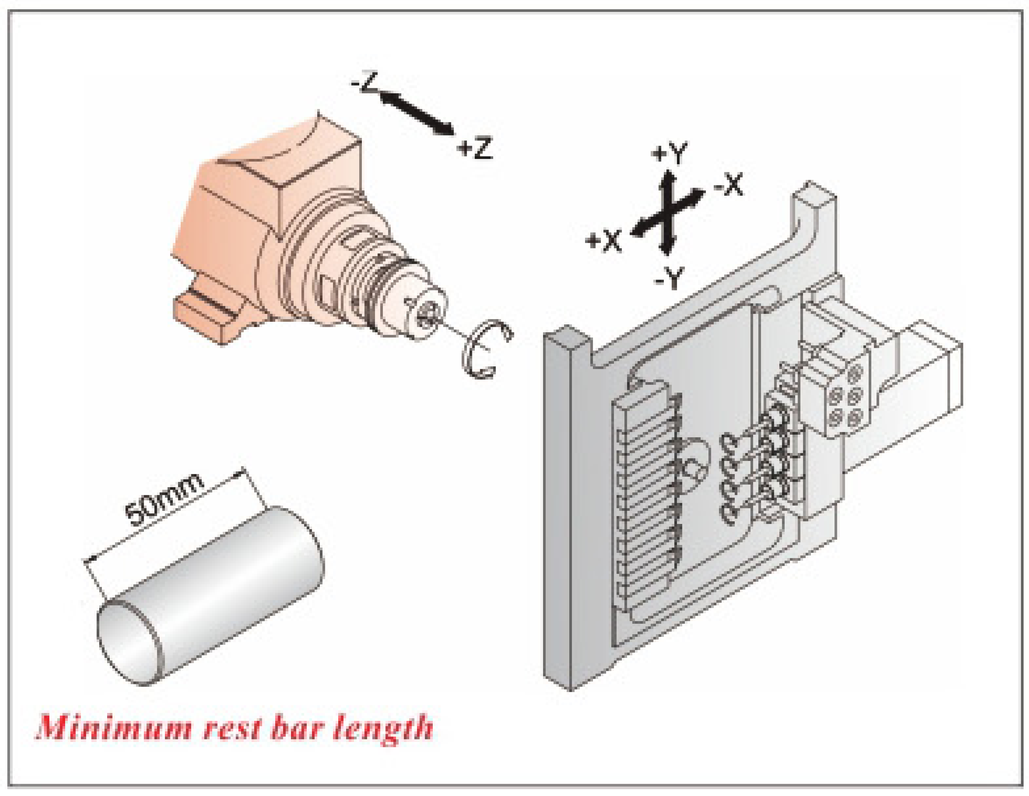

SS-20A

Model	Unit	SS-20	SS-20A	SS-20S	SS-20AS	SS-20AB
Max. turning dia. of main spindle	mm	20				
Max. turning dia. of sub spindle	mm	-	-	20	20	20
Max. turning length(Fixed guide bush)	mm	200				
Max. turning length(Rotary guide bush)	mm	85				
Max. turning length(Non guide bush)	mm	45				
Max. drilling capacity of main spindle	mm	10				
Max. drilling capacity of sub spindle	mm	-	-	10	10	10
Max. tapping capacity of main spindle		M8				
Max. tapping capacity of sub spindle		-	-	M8	M8	M8
Max. cross drilling capacity	mm	-	10	10	10	10
Max. cross tapping capacity		-	M6	-	M6	M6
No. of external turning tools	pcs	12	8	12	8	8
No. of internal turning tools	pcs	5				
No. of cross drillings	pcs	-	4(7*)	-	4(7*)	4(7*)
Face tool holder (Sub spindle)	pcs	-	-	-	-	4
Size of tool	mm	12 x 12 x 90				
No. of axis controls		3 (X/Y/Z)	4 (X/Y/Z/C)	4 (X/Y/Z/B)	5 (X/Y/Z/C/B)	7 (X1/Y1/Z1/X2/Z2/C1/C2)
Bore of spindle	mm	29				
Spindle speed range	rpm	200~8000				
Rapid traverse X/Z	M/min	24				
Main spindle motor	kw	3.7				
Sub spindle motor	kw	-	-	2.2	2.2	2.2
X1 / Z1 motor	kw	0.5 / 0.75				
Y-Axis motor	kw	0.75				
Cross drilling motor	kw	-	0.5	-	0.5	0.75
End drilling motor	kw	-	-	-	-	0.75
X2 / Z2 motor	kw	-	-	-/0.5	-/0.5	0.5/0.5
Coolant motor	kw	0.375				
Power requirement	KVA	10 KVA	10 KVA	15 KVA	15 KVA	15 KVA
Machine dimensions	mm	2015x1040x2210	2015x1040x2210	2030x1330x2025	2030x1330x2025	2605x1420x2150
Coolant tank	L	109 (100%)	109 (100%)	109 (100%)	109 (100%)	192 (100%)
Weight	kg	1800	1800	2125	2140	2400

*: Optional

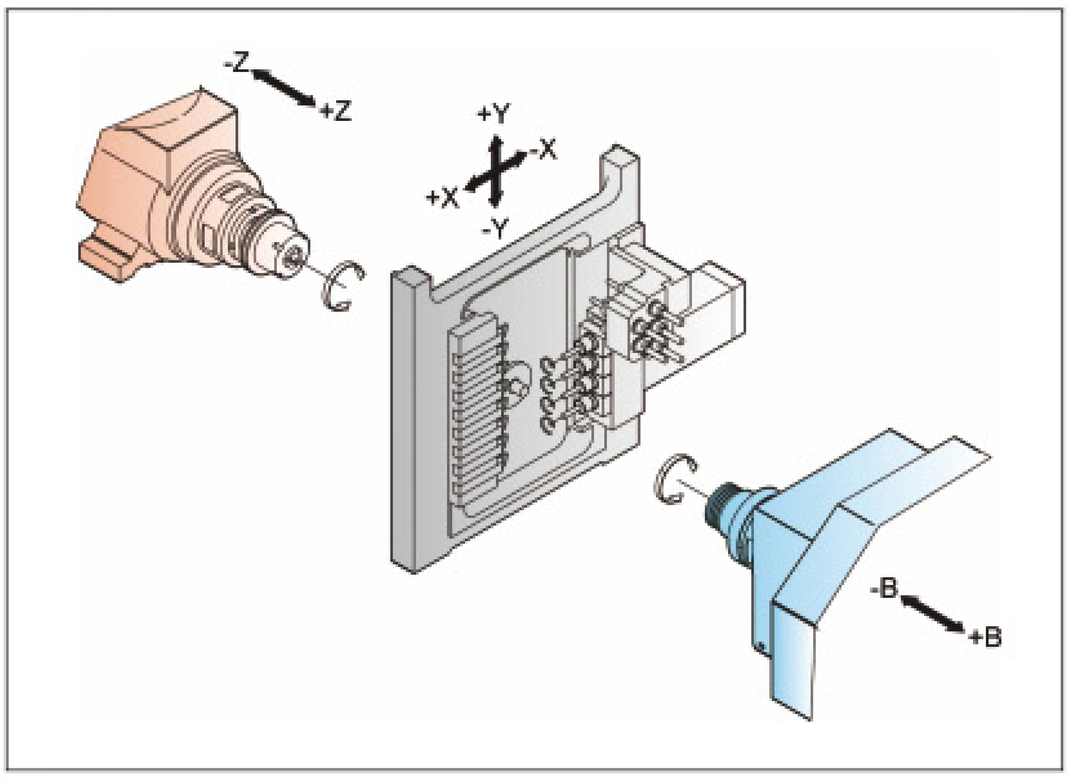

SS-20AS

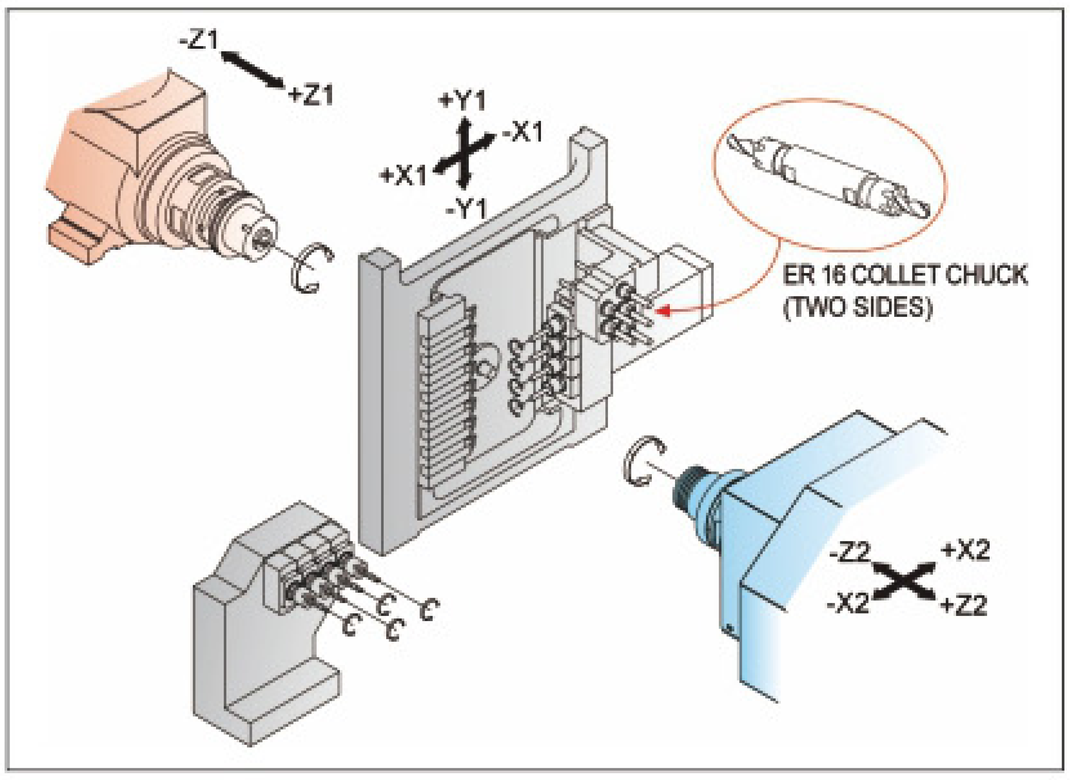

SS-20AB

CNC SWISS TYPE LATHE

SS-20RB/RBY

Axes Tooling Layout

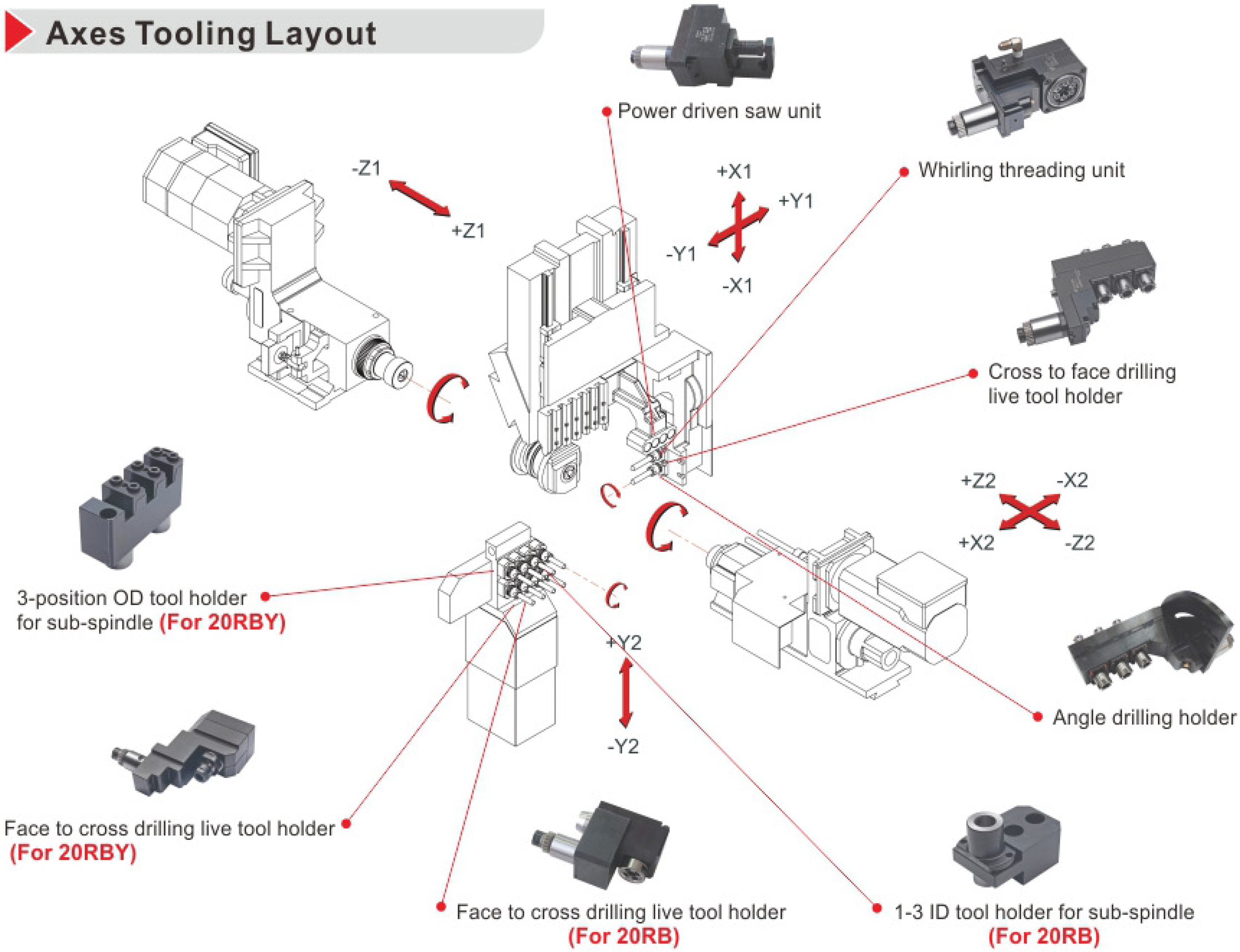

Model	Unit	SS-20RB	SS-20RBY
Main Spindle Max. Turning Diameter	mm	20	20
Sub Spindle Max. Turning Diameter	mm	20	20
Max. Turning Length (rotating bush)	mm	250	250
Max. Turning Length (non bush)	mm	50	50
Max. Turning Length (fixed bush)	mm	280	280
Main Spindle Max. Drilling / Tapping Capacity	mm	Ø10/M8	Ø10/M8
Sub Spindle Max. Drilling / Tapping Capacity	mm	Ø8/M8	Ø8/M8
Max. Cross Drilling / Tapping Capacity	mm	Ø8/M6	Ø8/M6
OD Tool Holder	pcs	6 / □12mm	6 / □12mm
ID Tool Holder	pcs	4 / Ø22mm	4 / Ø22mm
S1 Cross Live Tool Holder	pcs	5/ER-16	5/ER-16
Sub Spindle Face Live Tool Holder	pcs	4	8
Control Axis (with C axis)	pcs	7	8
Main / Sub Spindle Bore	mm	Ø26.6	Ø26.6
Main / Sub Spindle Max. Speed	rpm	10000/8000	10000/8000
X1/Z1/Y1/X2/Z2/Y2 Rapid Traverse	m/min	24	24
S1 Cross Drilling Max. Speed	rpm	8000	8000
S1 Cross Driven Motor	KW	1.2	1.2
S2 Face Driven Motor	KW	0.5	0.75
S2 Face Drilling Max. Speed	rpm	8000	8000
Main Spindle Motor	KW	2.2/3.7	2.2/3.7
Sub Spindle Motor	KW	1.5/2.2	1.5/2.2
X1 /Z1 /Y1 Motor	KW	0.75	0.75
X2/Z2 Motor	KW	0.5	0.5
Y2 Motor	KW	non	0.5
Coolant Pump	KW	2.3	2.3
Power Requirements	KVA	20	20
Lubrication Capacity	L	2	2
Coolant Tank Capacity	L	220(100%)	220(100%)
Machine Dimensions (LxWxH)	mm	2846x1284x2024	2846x1284x2024
Weight	KG	2670	2700

Standard Accessory

	20RB	20RBY
• External Tool Holder (6 Tools)	○	○
• Inner Tool Holder (4 Tool)	○	○
• Cross Drilling Tool Holder (5 Tools)	○	○
• Parts Catcher And Conveyor	○	○
• Tools & Tool Box	○	○
• Lighting Device	○	○
• Non Guide Bushing Holder or Fixed Guide Bush Holder	○	○
• Spindle Servo Motor	○	○
• Main Spindle C Axis	○	○
• Cutting Coolant	○	○
• Cutting Coolant Inspection (Electronic Type)	○	○
• Cut-off Inspection	○	○
• Lubrication Device	○	○
• Sub Spindle C Axis	○	○
• Sub Spindle		

	20RB	20RBY
• Sub Spindle Tool Holder for 4 Position Eccentric & Drilling	○	–
• Sub Spindle Tool Holder for 8 Position Eccentric & Drilling	–	○
• Y2 Axis	–	○
• Fixed Tool Holder (sub Spindle)	2 Pcs	3 Pcs
• Rotary Tool Holder (sub Spindle)	2 Pcs	3 Pcs
• 3 Position OD Tool Holder □10 (sub Spindle)	–	1 Pcs
• Chuck Gripper	2 Pcs	2 Pcs
• Machining Room With Safety Lock	○	○
• Guide Bush	1 Pcs	1 Pcs
• Spindle Collet Chuck	2 Pcs	2 Pcs
• Operation Manual	○	○
• NC Operation Manual	○	○
• NC Maintenance Manual	○	○

Optional Accessory

- ER16 M2 Double Sided Inner Tool Holder
- Simultaneous Rotary Guide Bushing Holder
- Long Parts Catcher (Sub Spindle)
- Chip Conveyor & Cart
- ER16 Collet Set
- Cutting Oil Chiller
- Collet Spring
- Chuck Gripper
- Stationary Tool Holder (Sub Spindle) ER-16
- Rotary Tool Holder (Sub Spindle) ER-16
- Whirling Threading Unit (Without Inserts and Insert Holder)
- Power Driven Saw Unit (Main Spindle)
- Power Driven Saw Unit (Sub Spindle)
- 3 Position Face Live Tool Holder For Main And Sub Spindle
- 3 Position Angle Drilling Tool Holder (Manual Adjusting)
- 1 Position Cross Live Tool (Sub Spindle)
- 1 Position OD Tool Holder (Sub Spindle)
- Ø16 ID Tool Holder Shortened Type (Sub Spindle)
- Ø16 ID Tool Holder (Sub Spindle)
- Extended ID Tool Holder Ø16
- Extended ID Tool Holder Ø16 (With One Ø16 ID Tool Holder)
- Voltage Stabilizer 20kva
- Transformer 20kva
- Oil Mist Collector
- H.P. Coolant System 15/50/100 Bar (With Sub Coolant Tank)
- CE certification
- Hydraulic Bar Feeder

CNC SWISS TYPE LATHE

SS-32A/32S/32AS/32AB/42AB

Control panel can be moved and swiveled for upgrading convenience of operation.

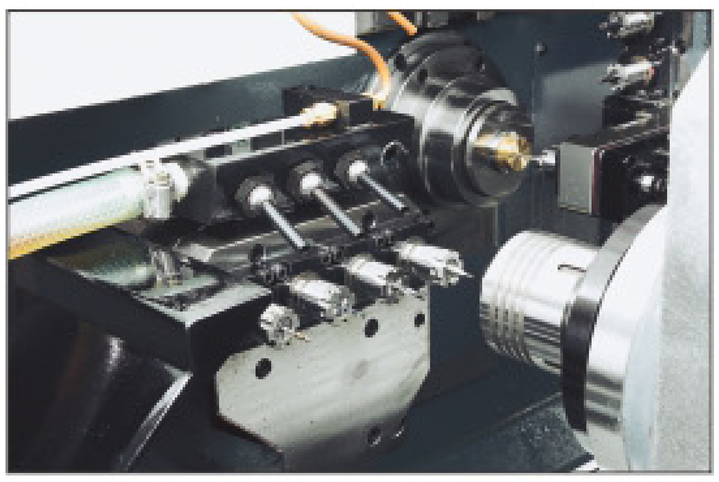

SS-26AB/ SS-32AB/ SS-42AB
The main spindle and sub-spindle perform machining synchronously.

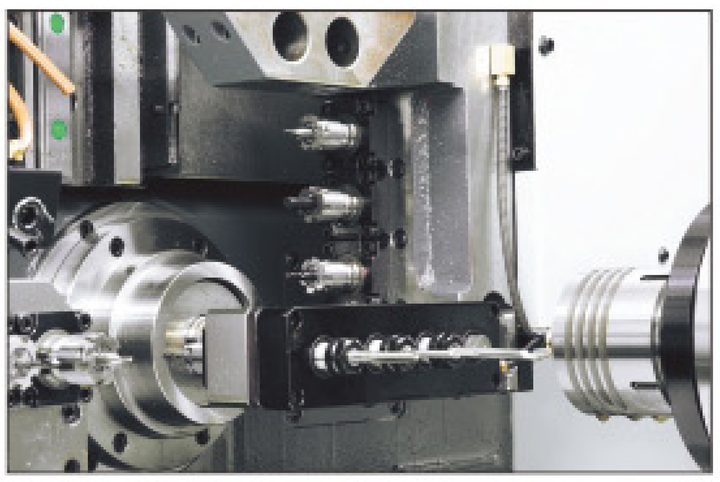

SS-26AB/ SS-32AB/ SS-42AB
Main spindle and sub-spindle perform machining synchronously.

Standard Accessory

- Spindle servomotor
- External tool holder (6-tool)
- Internal tool holder (5-tool)
- Cross drilling tool holder (4-tool)
- Tool & tool box
- Lighting device
- Fixed guide bush holder
- C axis function
- Cutting coolant
- Cutting coolant inspection
- Cut off inspection
- Lubrication device
- Operation manual
- Chuck gripper x1
- Guide bush x1
- Spindle collet x1
- Main spindle hydraulic chuck system

Optional Accessory

- Parts catcher
- Parts conveyor
- Non guide bush holder
- ER 16 collet chuck (two sides)
- Simultaneously rotary guide bush holder
- Long parts catcher
- Chip conveyor
- ER 16 collet set
- ER 20 collet set
- Cutting oil cooler
- 3 Position eccentric rotary tool holder
- Voltage stabilizer
- Transformer
- CE mark
- Multiple bar feeder

Model	Unit	SS-32A	SS-32S	SS-32AS	SS-26AB	SS-32AB	SS-42AB
Max. turning dia. of main spindle	mm	32	32	32	26	32	42
Max. turning dia. of sub spindle	mm	-	32	32	26	32	42
Max. turning length (Fixed guide bush)	mm	220					
Max. turning length (Rotary guide bush)	mm	200					
Max. turning length (Non guide bush)	mm	80	80	80	65	80	80
Max. drilling capacity of main spindle	mm	13					
Max. drilling capacity of sub spindle	mm	-	13	13	13	13	13
Max. tapping capacity of main spindle		M10					
Max. tapping capacity of sub spindle		-	M10	M10	M10	M10	M10
Max. cross drilling capacity	mm	10	-	10	10	10	10
Max. cross tapping capacity		M8	-	M8	M8	M8	M8
No. of external turning tools	pcs	6					5
No. of internal turning tools	pcs	5					
No. of cross drillings	pcs	4 +(1)					
Face tool holder no. (Sub spindle)	pcs	-	-	-	4	4	4
Size of tool	mm	16 x 16 x 95 - 155					20x20x95-155
No. of axis controls		4	4	5	7	7	7
Bore of spindle	mm	45	45	45	40	45	55
Spindle speed range	rpm	200~7000					200~6000
Rapid traverse X/Z	M/min	24					
Main spindle motor	kw	7.5					
Sub spindle motor	kw	-	7.5	7.5	7.5	7.5	7.5
X1 / Z1 motor	kw	1.4					
Y-Axis motor	kw	0.75					
Cross drilling motor	kw	1.4	-	1.4	1.4	1.4	1.4
End drilling motor	kw	-	-	-	0.75	0.75	0.75
X2 / Z2 motor	kw	-	-/0.75	-/0.75	0.75/0.75	0.75/0.75	0.75/0.75
Coolant motor	kw	2.3					
Machine dimensions	mm	2360x1660x2095	2270 x 1450 x 1835		2865 x 1625 x 2045		
Coolant tank	L	212(100%)	212(100%)	212(100%)	320(100%)	320(100%)	320(100%)
Weight	kg	2500	2650	2700	3700	3700	3700

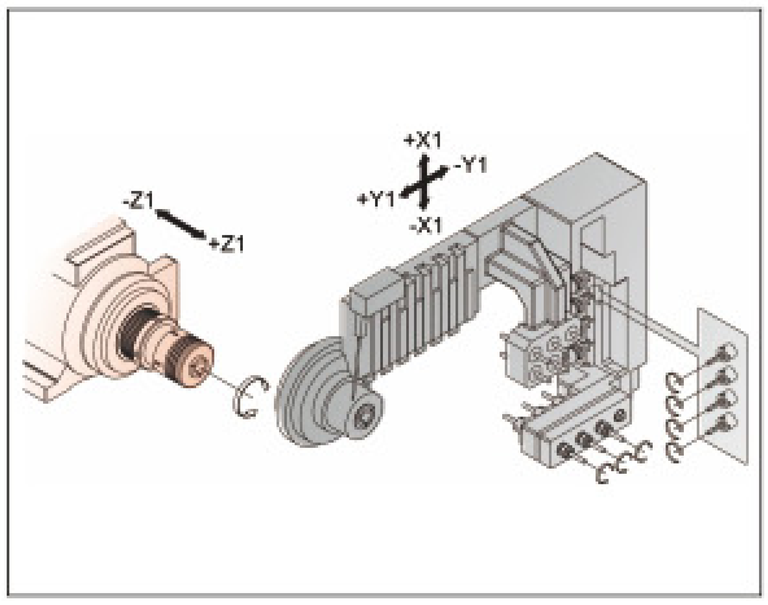

SS-32A

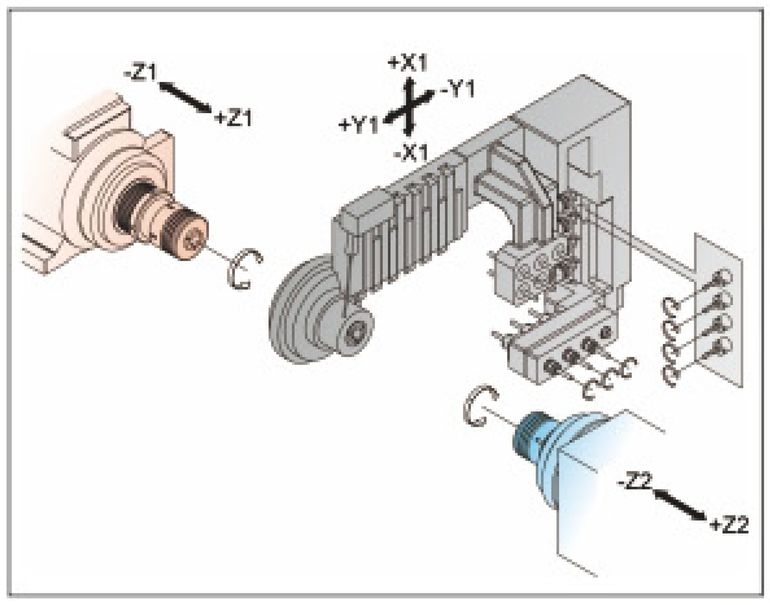

SS-32S/32AS

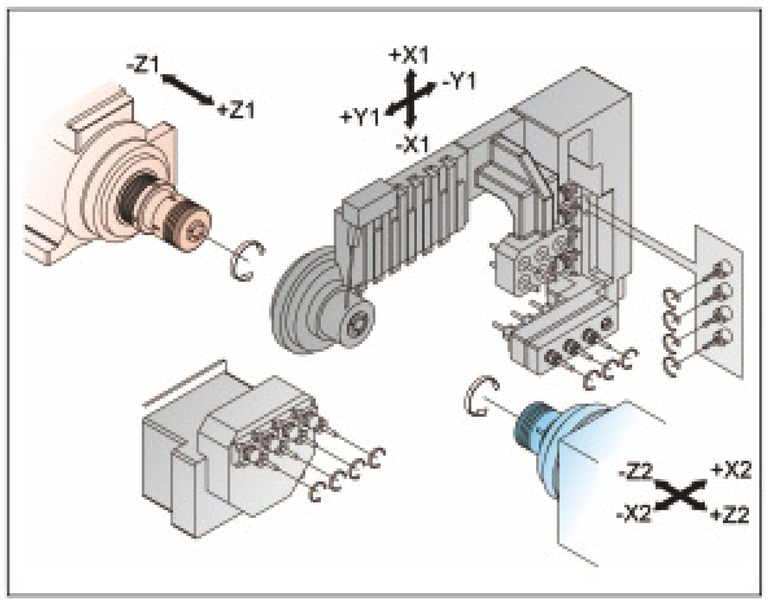

SS-32AB/42AB

CNC SWISS TYPE LATHE

SS-42ABY

- Max. turning diameter 42mm.
- Both guide bush/ Non guide bush are available for making complicated components.
- With hydraulic chuck system on main spindle, it accepts poor tolerance bar to save the material cost.
- Deep hole drilling on sub spindle side with central cooling system. It has both fixed and rotary type.
- The tooling system has two Y-axis and CS axis. In total, there are 37 tool holders and 19 of them are living tools.
- Cross and face drilling function are available on main and sub spindle.
- Built-In spindle with oil cooling system offers high efficiency, low noise and high accuracy environment.

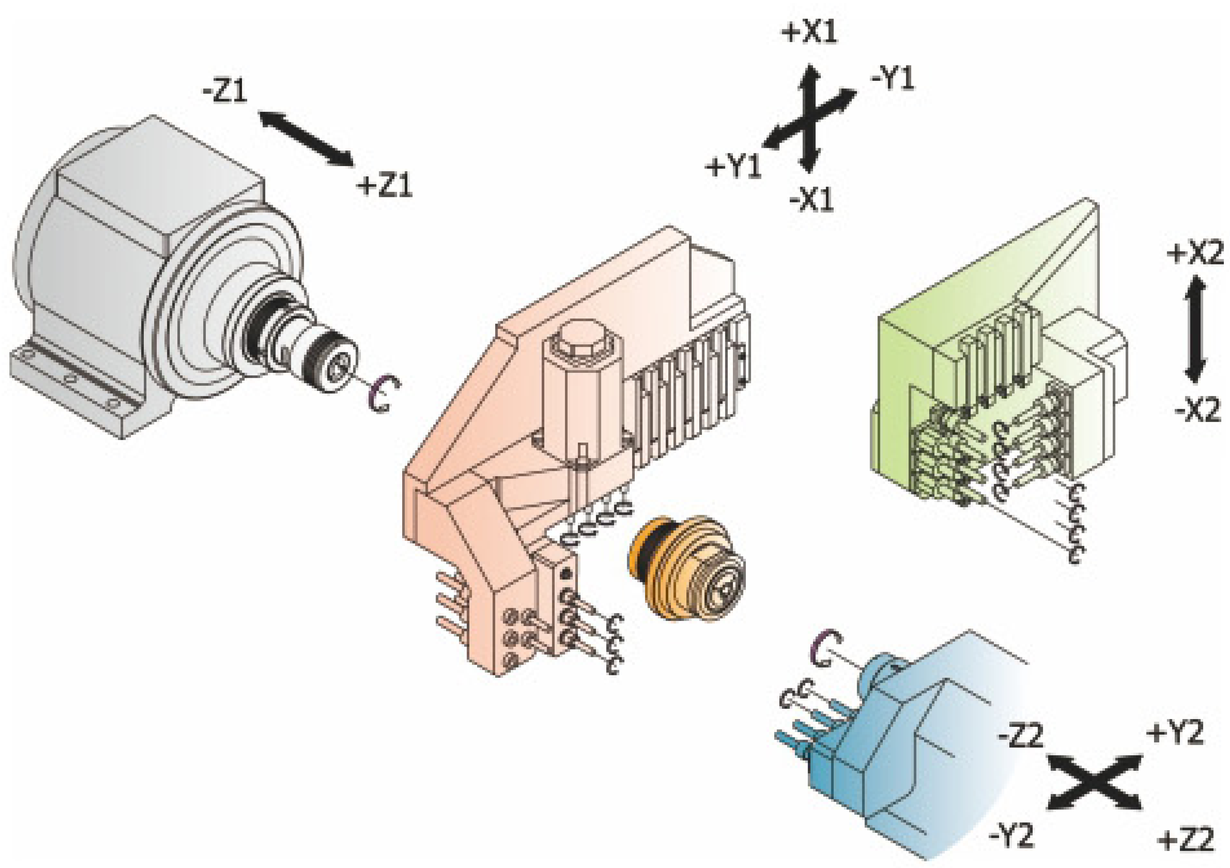

Internal tool holder (5-tool)

Main spindle end-face eccentric rotary tool holder (3-position)

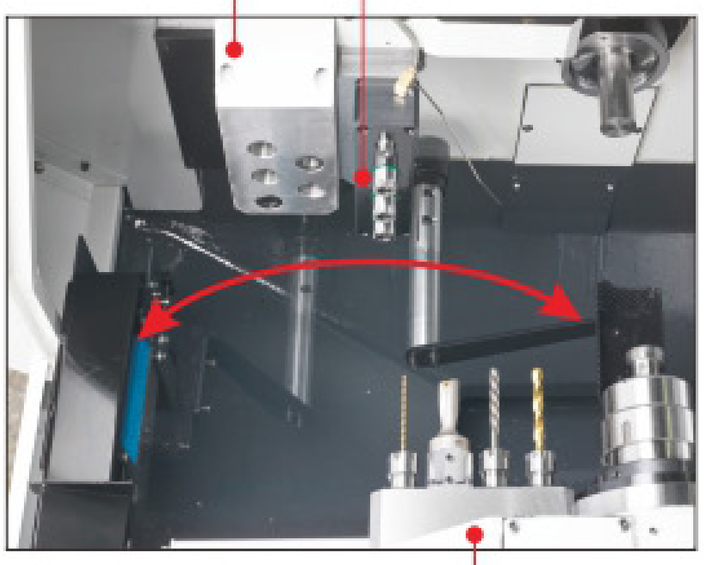

Main spindle end-face eccentric rotary tool holder (3-position)

* S2 aside stationary tool holder (4-position)

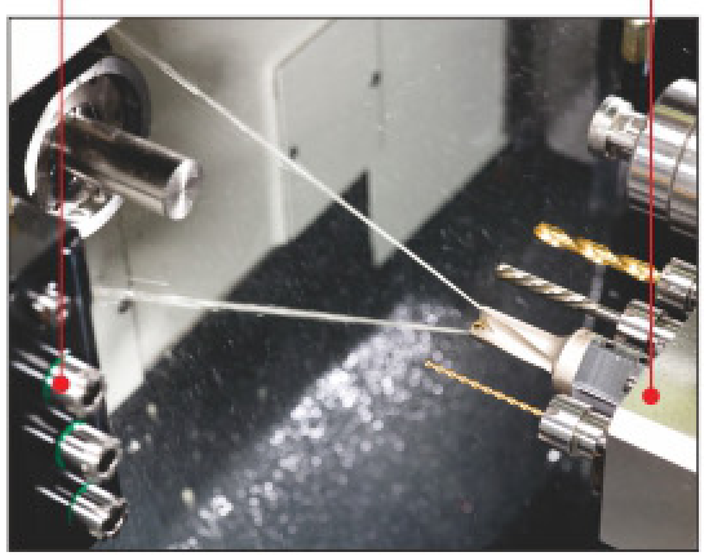

Parts catcher

The parts catcher is at left side of spindles and it catches the part from sub spindle.

Sub Spindle Aside Drilling/ Milling

The four tool holder next to sub spindle can be equipped either stationary or rotary tool holders. One of the tool holders can be equipped central cooling system to make deep hole drilling.

Standard Accessory

- Main system
  Main spindle CS axis
  External tool holder (6-tool)
  Internal tool holder (5-tool)
  Cross drilling tool holder (4-tool)
- Sub system
  Sub spindle 5° multiple orientation
  External tool holder (4-tool)
  Internal tool holder (3-tool)
  Aside cross drilling tool holder (4-tool)
- Parts catcher
- Tool & tool box
- Lighting device
- Coolant device
- Coolant inspection
- Cut off inspection
- Non guide bush holder
- Main/ Sub spindle hydraulic cylinder
- Lubrication device
- Operation manual
- Collet chuck
- Base block 8 pcs

Optional Accessory

- Simultaneously rotary guide bushing holder
- Chip conveyor
- Spindle cooling system
- S1 end-face eccentric rotary tool holder (3-position)
- S2 end-face eccentric rotary tool holder (4-position)
  ◎*S2 aside rotary tool holder(4-position)
- S2 aside center cooling device for mark ◎ (1-position)
- Voltage stabilizer
- Transformer
- Multiple bar feeder
- Sub spindle C-axis

Model	Unit	SS-42ABY
Main spindle Max. turning diameter	mm	42
Sub spindle Max. turning diameter	mm	42
Max. turning length	mm	Rotary guide bush: 200, Non guide bush: 125
Main spindle Max. drilling diameter	mm	30
Sub spindle Max. drilling diameter	mm	30
Main spindle Max. tapping diameter	mm	M16
Sub spindle Max. tapping diameter	mm	M16
Max. cross drilling diameter	mm	13
Max. cross tapping diameter	mm	M10
External tool holder	pcs	6
Inner tool holder	pcs	5
Cross drilling tool holder	pcs	4 (5)
Sub spindle external tool holder	pcs	4
Sub spindle inner tool holder	pcs	3
Sub spindle cross drilling tool holder	pcs	4
Sub spindle face drilling tool holder	pcs	4
Tool size (LxWxH)	mm	20x20x95~155
Control axis	pcs	C1 / (C2) / X1 / Y1 / Z1/ X2 / Y2 / Z2
Main spindle bore	mm	58
Main spindle speed	rpm	15~6000
Sub spindle bore	mm	56
Sub spindle speed	rpm	15~6000
X / Z / Y-axis rapid traverse	M/min	18
S1 cross drilling speed	rpm	4000
S2 face drilling speed	rpm	3000
Main spindle motor	kw	7.5 (15)
Sub spindle motor	kw	7.5
X1 / Z1 motor	kw	1.6
Y1 motor	kw	1.4
S1 cross drilling motor	kw	1.6
X2 / Z2 motor	kw	1.4
Y2 motor	kw	1.4
S2 face drilling motor	kw	1.6
Hydraulic motor	kw	0.75
Coolant pump	kw	2.3 x 2pcs
Power requirement	kw	40
Lubrication capacity	L	2
Coolant tank capacity	L	480
Machine dimensions (LxWxH)	mm	3380 x 2455 x 2155
Weight	kg	7500

*Only one device is available on the machine.
S1: System 1 (Main spindle system)
S2: System 2 (Sub spindle system)

Sub spindle end-face eccentric rotary tool holder (4-position)

Tooling system

Main spindle:
- External tool holder: 6
- Inner tool holder: 5
- S1 end-face eccentric rotary tool holder (3-position)
- Cross drilling tool holder: 4

Sub spindle:
- Inner tool holder: 3
- Cross drill tool holder: 4
- External tool holder: 4

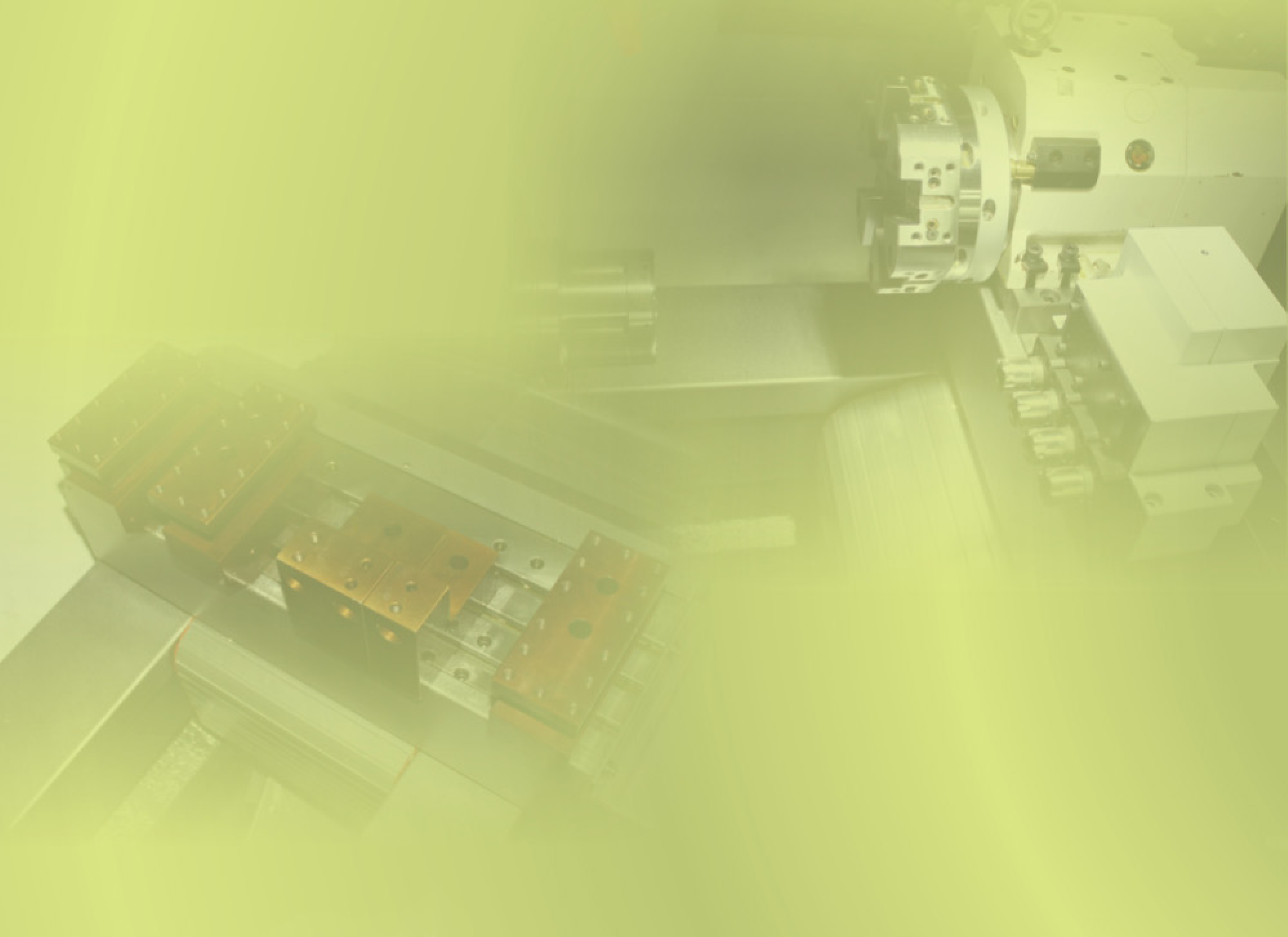

SELICA INTERNATIONAL CO.,LTD.

No. 48-26, Xilin Ln., Xitun Dist., Taichung City 407, Taiwan
TEL: +886-4-2463 0182 E-mail: info@selica.com.tw
FAX: +886-4-2463 8910 http://www.selica.com.tw

Agents:

Note: To reserch and improve, our company keep the right of changing designs and specifications without further notice.

2014/04 886-4-24732298 500